Ground Distribution

– G401

NOTE: Wires shown without color codes are black.

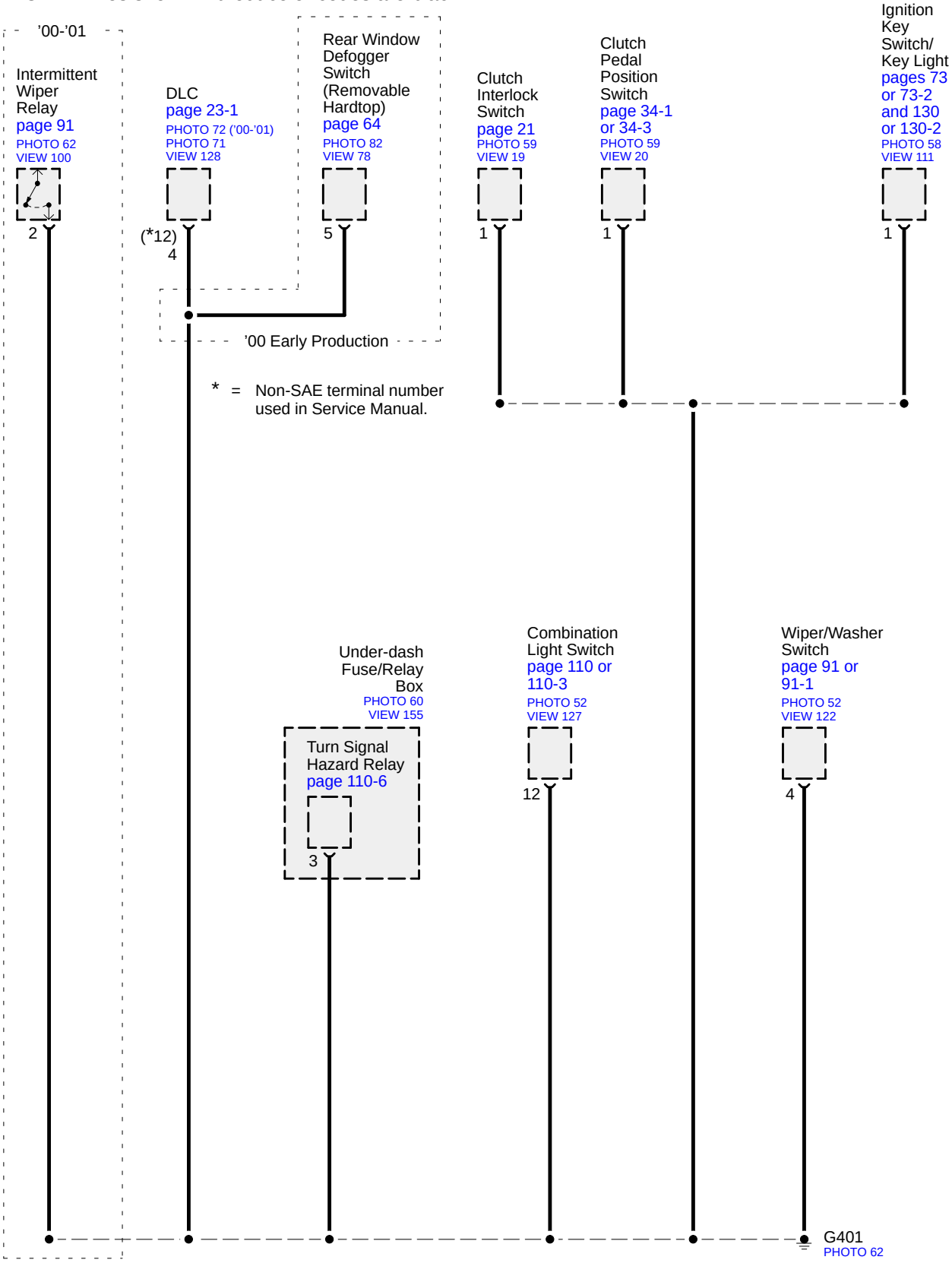

©2005 American Honda Motor Co., Inc.